IKEGAWA

IK-D8323CR-B

8MP Hybrid HD Analogue Fixed Dome Camera

Key Features

- 1/2.8" Progressive Scan CMOS
- Max. 8MP(3840×2160) @15fps resolution
- 3.6mm fixed lens, 2.8mm optional
- IR distance up to 20m
- WDR, 3D DNR, ICR, BLC, GLOBE, AWB
- Support AHD/TVI/CVI/CVBS Output
- IP67, IK10

Specification

Camera	
Image Sensor	1/2.8” Progressive Scan CMOS
Signal System	PAL/NTSC
Electronic Shutter	Auto/Manual, 1/30 ~ 1/10,000s
Min. illumination	Color: 0.01 Lux @ (F1.2, AGC ON), 0 Lux with IR on
S/N Ratio	More than 50dB
OSD Joystick	Supported
Up the Coax	Supported
Angle Adjustment	Pan: 0˚ ~ 335˚, Tilt: 0˚ ~ 75˚, Rotation: 0˚ ~ 350˚
Language	English, Chinese, Traditional Chinese, Russian, Spanish, French, Polish, Italian, Portuguese, Japanese, Korean.
Lens	
Lens Type	Fixed
Iris	Fixed Iris
Focal Length	3.6 mm
Max. Aperture	F2.0
Field of View (FoV)	H: 84.4°, V: 45.5°
Illuminator	
Illuminator Type	IR
Illuminator Number	2pcs
Illumination Distance	Up to 20 m (65.6 ft)
IR wavelength	850 nm
Video	
Resolution	8MP (3840×2160)
Frame Rate	AHD/TVI/CVI: 8MP @ 15fps/12.5fps CVBS: PAL/NTSC
Video Output	Support AHD/TVI/CVI/CVBS Output
Day/Night	Auto, Color, B/W, Ext
OSD Menu	Supported

Wide Dynamic Range	WDR, OFF/ON
Gain Control	Auto
Noise Reduction	2D/3D DNR, Auto/Manual
White Balance	Auto
BLC	Supported
General	
Power Supply	12 VDC ±10%
Power Consumption	Max. 3.5 W (12V DC, IR ON)
Operating Temperature	-10 °C to 55 °C (14°F to 131 °F)
Operating Humidity	Less than 85% RH
Ingress Protection	IP67, IK10
Certifications	CE-EMC: - EN 61000-6-3, EN 61000-3-2, EN 61000-3-3, EN 50130-4 FCC 47 CFR Part 15 Subpart B
Material	Aluminum alloy body, bubble: plastic
Dimensions	Φ110 × 85.4 mm (ϕ4.33 × 3.36 inch)
Net Weight	0.39 kg (0.86 lb)

Dimensions (mm)

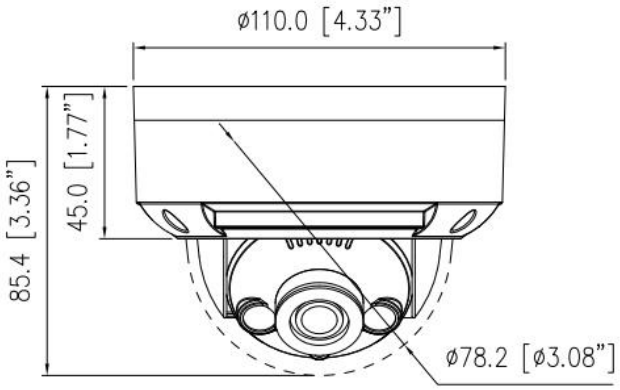

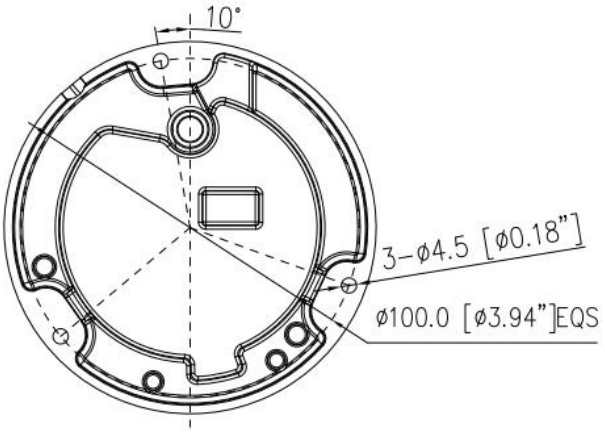

Accessories

Optional:

IK-AJ56 Junction Box	IK-ACC02 Pendant Cap	IK-AC02 Ceiling Bracket	IK-AW01 Corner Mount
IK-AW02 Wall Mount	**IK-AP01 Pole Mount**	**IK-ACR02 Corner Mount**	
		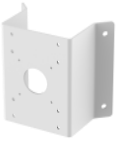	

©2025 IKEGAWA all rights reserved. Design and specifications are subject to change without notice. | www.ikegawacctv.com