IKEGAWA

IK-T8868FC-B

8MP 180° Panoramic Turret Network Camera

Key Features

- 2×5MP 1/2.8” STARVIS™ CMOS
- Output 180° wide angle splicing image
- Outputs max. 8MP (4224×1848)@25/30 fps, and supports 2592×1944 @25/30fps
- Support human and vehicle detection and capture
- Intelligent analysis: intrusion, single / double line crossing, loitering, wrong-way, illegal parking, smart motion detection, people counting, and heat map
- True WDR, 3D DNR, ROI, Defog, HLC
- Built-in warm light and IR light, the max. illumination distance up to 30m (98.4ft)
- Built-in red and blue warning light, support sound-light warning
- Built-in microphone and speaker, 1/1 audio in/out, 1/1 alarm in/out
- Built-in SD card slot, up to 1TB
- IP66

Specification

Camera	
Image Sensor	Dual 1/2.8” Progressive Scan CMOS
Max. Resolution	8MP, 4224(H) × 1848(V)
Electronic Shutter	Auto/Manual, 1/5 to 1/100,000s
Min. illumination	Color: 0.01 Lux @ (F1.6,AGC ON) B/W: 0.001 Lux @ (F1.6,AGC ON), 0 Lux with light on
Day & Night	Auto (ICR)
Wide Dynamic Range	True WDR
Angle Adjustment	Pan: 0˚ to 360˚, Tilt: 0˚ to 90˚, Rotation: 0˚ to 360˚
Lens	
Lens Type	Fixed-focal lens, Dual lens
Iris	Fixed Iris
Focal Length	2.4 mm
Max. Aperture	F1.6
Field of View (FOV)	H: 192.4°, V: 80.2°
DORI Distance	
Detect	53 m (173.9 ft)
Observe	21.2 m (69.6 ft)
Recognize	10.6 m (34.8 ft)
Identify	5.3 m (17.4 ft)
DORI (Detect, Observe, Recognize, and Identify) is a standard system (EN-62676-4) for defining the ability of a person viewing the video to distinguish persons or objects within a covered area. The numbers in this table do not reflect intelligent function distances.	
Illuminator	
Illuminator Type	2 (IR LED), 2 (Warm Light)
Illumination Distance	IR distance up to 30 m (98.4 ft) Warm light distance up to 20 m (65.6 ft)
Illumination Control	IR mode, White mode, Intelligent mode, None
IR Wavelength	850 nm
Intelligent Analytics	
Multi-Object Detection	Supports face, human, vehicle detection and capture. Supports multiple frame modes: Full Frame, Four-corner Frame, and Mosaic.

Intelligent Analysis	Intrusion, Single line crossing, Double line crossing, Loitering, Wrong-way, Illegal parking, and Smart motion detection. Support alarm triggering by specified target types (human and vehicle).
People Counting	Supported
Heat Map	Supported
Video and Audio	
Streaming Capability	3 Streams
Stream/Frame Rate	Splicing mode: - Stream1: 4224×1848, 3072×1760, 3072×1536, 2880×1440, 2560×1280, 2048×1024 @ 25/30fps - Stream2: 1920×832, 1536×576 @ 25/30fps - Stream3: 1920×832, 1280×560 @25/30fps Multi-channel mode: - Stream1: 2592×1944,2592×1520, 1920×1080,1280×720 @25/30fps, - Stream2: D1, VGA, CIF, QVGA @ 25/30fps
Bit Rate Control	CBR/VBR
Bit Rate	Splicing mode: - Stream1: 500 kbps to 16 Mbps - Stream2: 200 kbps to 8 Mbps - Stream3: 200 kbps to 8 Mbps Multi-channel mode: - Stream1: 200 kbps to 16 Mbps - Stream2: 100 kbps to 6 Mbps
Smart Encoder	Supported
Region of Interest (ROI)	Supported
Audio Compression	G.711 A-law, G.711 µ-law, RAW_PCM
Audio Bit Rate	64 Kbps (G.711), 128 Kbps (RAW_PCM)
Image	
Image Adjustment	Brightness, Sharpness, Contrast, Saturation adjustable
Scene Setting	Indoor, Outdoor
Exposure Mode	Auto, Manual, Shutter priority
White Balance	Auto, Tungsten, Fluorescent, Daylight, Shadow, Manual
Day/Night Setting	Auto, Day, Night, Timer
Noise Reduction	2D/3D DNR
Image Enhancement	WDR, HLC, BLC, Defog
Privacy Masking	4 areas
Event	
Alarm Triggers	IVS, Motion detection, Alarm input, Network alarm, Disk alarm, Day/Night switch alarm, Abnormal sound detection
Event Actions	Alarm record, Alarm output, FTP upload, SMTP upload, Audible alarm output, White light alarm output, Red and blue light alarm

Network	
Protocols	IPv4/IPv6, HTTP/HTTPS, DNS, DDNS, DHCP, PPPoE, RTSP/ RTCP/RTP, TCP/UDP, NTP, ARP, UPnP, FTP, SMTP, QoS, ICMP, IGMP, SMTP, 802.1x, SNMP, Multicast
Interoperability	ONVIF (Profile S/T/G/M), SDK, CGI
Max Concurrent Streams	10 channels
User/Host Level	32+ users, 3 levels: Administrator, Operator, Media user
Security	IP address filter, HTTPS, Illegal login lock, IEEE 802.1x
Web Viewer	<IE11, Chrome, Firefox, Microsoft Edge
Interface	
Network Interface	1 Ethernet (100/1000 Base-T) RJ-45 Connector
Built-in Microphone	Supported
Built-in Speaker	Supported
Audio Interface	1ch Input, 1ch Output
Alarm Interface	1ch Input, 1ch Output
SD Card Slot	Built-in, up to 1 TB
Reset Button	Supported
General	
Language	English, Chinese, Traditional Chinese, Polish, Italian, Portuguese, Spanish, Russian, French, Czech, Hungarian, Japanese, Korean. Default: English
Power Supply	12VDC (-15% to +25%) / PoE (802.3af)
Power Consumption	Typical: 4.2 W (12 VDC) / approx. 5.3 W (PoE) Max. (IR on + Red/Blue light + Speaker): 8.9 W (12VDC) / approx. 11.2 W (PoE)
Operating Temperature	-40°C to 60°C (-40°F to 140°F)
Operating Humidity	Less than 90% RH
Ingress Protection	IP66
Certifications	CE-EMC - EN 55032, EN IEC 61000-6-4, EN IEC 61000-3-2, EN 61000-3-3, EN 55035, EN 50130-4 FCC 47 CFR Part 15 Subpart B
Material	Aluminum alloy body, Decoration ring: plastic
Dimensions	Φ140 × 119.2 mm (ϕ5.51 × 4.69 inch)
Net Weight	0.93 kg (2.05 lb)

Dimensions (mm)

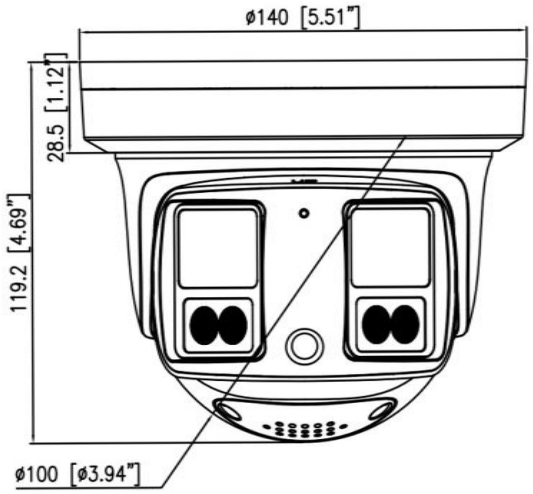

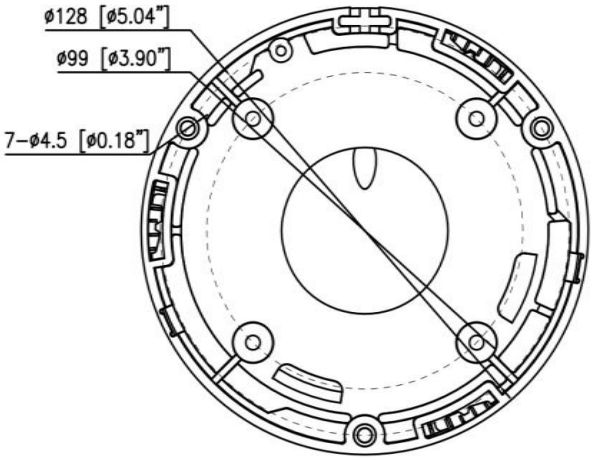

Accessories

Optional:

IK-AJ45G Junction Box	IK-ACC06 Pendant Cap	IK-AC02 Ceiling Bracket	IK-AW01 Corner Mount
IK-AW02 Wall Mount	**IK-AP01 Pole Mount**	**IK-ACR02 Corner Mount**	
		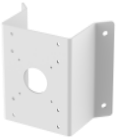	

©2025 IKEGAWA all rights reserved. Design and specifications are subject to change without notice. | www.ikegawa.ai