IK-A18B18-R-CB

8MP Hybrid HD Analog IR Bullet Camera

Key Features

- 1/3" progressive scan CMOS, up to 8MP (3840 × 2160) @ 15 fps
- Optional 2.8 mm / 3.6 mm fixed lens
- Up to 300 m video transmission distance
- Up to 20 m (65.6 ft) IR illumination distance
- Supports 2D DNR, DWDR, ICR, ATW and BLC
- Supports AHD / TVI / CVI / CVBS video outputs
- Multi-language OSD with 11 languages
- IP66

Product specifications are subject to change without prior notice. For the latest product information, please visit www.ikegawacctv.com.

© 2026 Ikegawa Co., Ltd. All rights reserved.

Specifications

Camera	
Image Sensor	1/3” Progressive Scan CMOS
Electronic Shutter	Auto
Min. Illumination	Color: 0.02 Lux @ F1.2, AGC ON; 0 Lux with IR on
S/N Ratio	>48 dB
Day/Night Setting	Auto / Color / B&W / External
Exposure Mode	Global / Center / BLC
Wide Dynamic Range	DWDR
BLC	Supported
White Balance	ATW / Manual
Noise Reduction	2D DNR
Image Enhancement	Contrast, Sharpness, Saturation
Mirror	On / Off
Flip	On / Off
OSD Language	11 languages: English, Simplified Chinese, Traditional Chinese, Russian, Spanish, French, Polish, Italian, Portuguese, Japanese, Korean
OSD Joystick	Optional
Up-the-Coax	Supported
Lens	
Lens Type	Fixed
Focal Length	2.8 mm / 3.6 mm (Optional)
Max. Aperture	F2.2
Iris	Fixed Iris
Field of View (FOV)	2.8 mm: H 89.2°, V 48.9° 3.6 mm: H 74.3°, V 40.9°
Illuminator	
Illuminator Type	IR
Illumination Distance	Up to 20 m (65.6 ft)
IR Wavelength	850 nm
Control	Auto / Manual / Off
Number of Illuminators	2
Video	

Product specifications are subject to change without prior notice. For the latest product information, please visit www.ikegawacctv.com.

© 2026 Ikegawa Co., Ltd. All rights reserved.

Resolution	8MP (3840 × 2160)
Frame Rate	AHD / TVI / CVI: 8MP @ 12.5/15 fps AHD / TVI: 5MP @ 12.5/20 fps, 4MP @ 15/25/30 fps, 1080p @ 25/30 fps CVI: 4MP @ 25/30 fps
Video Output	AHD / TVI / CVI / CVBS, switchable
Video Standard	PAL / NTSC
General	
Power Supply	12 VDC ±10%
Power Consumption	Max. 4 W (12 VDC, IR on)
Operating Temperature	-10 °C to 55 °C (14 °F to 131 °F)
Operating Humidity	<85% RH
Ingress Protection	IP66
Certifications	CE-EMC: EN 61000-6-3, EN 61000-3-2, EN 61000-3-3, EN 50130-4 FCC: 47 CFR Part 15, Subpart B
Material	Aluminum alloy
Angle Adjustment	Pan: 0°–360°; Tilt: 0°–90°; Rotation: 0°–360°
Dimensions	Ø70 × 183.6 mm (Ø2.76 × 7.23 in)
Net Weight	Approx. 0.29 kg (0.64 lb)

Dimensions (mm)

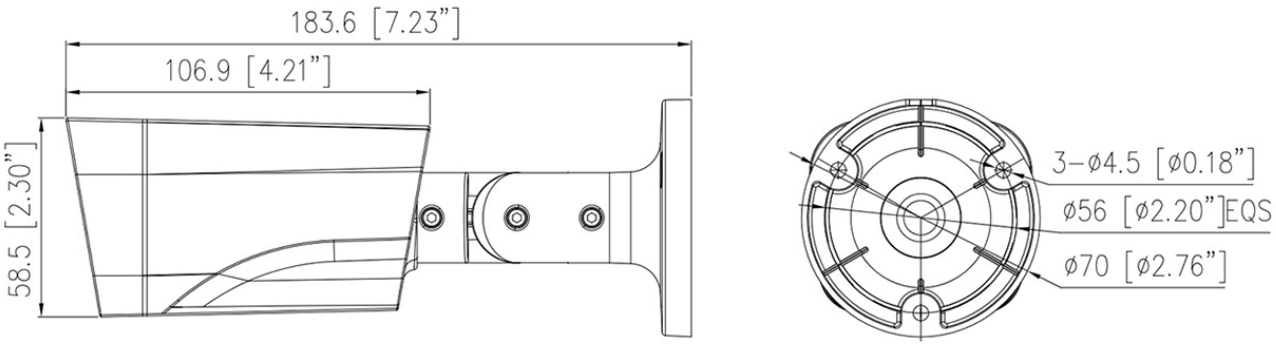

Product specifications are subject to change without prior notice. For the latest product information, please visit www.ikegawacctv.com.

© 2026 Ikegawa Co., Ltd. All rights reserved.

Accessories

Optional:

IK-AJ56B

Junction Box

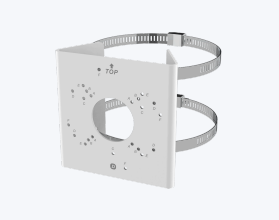

IK-AP27D

Pole Mount Bracket

Product specifications are subject to change without prior notice. For the latest product information, please visit www.ikegawacctv.com.

© 2026 Ikegawa Co., Ltd. All rights reserved.