# IK-B5867FW-B

5MP Full Color Bullet Network Camera

## Key Features

- 1/2.8” STARVIS™ CMOS, up to 5MP (2592 × 1944) @ 25/30 fps
- 2.8 mm / 4 mm fixed lens optional
- Supports face, human, and vehicle detection with snapshot capture
- Intelligent analytics: Intrusion, smart motion detection, single line crossing, double line crossing, loitering, wrong-way detection, area people limit, perimeter detection, illegal parking, running detection, fall detection, fight detection, and people counting.
- True WDR (120dB), 3D DNR, ROI, Defog, HLC
- Built-in warm lights, illumination distance up to 40 m
- Built-in mic and speaker, 1/1 audio input/output, 1/1 alarm input/output
- Built-in microSD card slot (up to 1 TB)
- IP66 protection

Product specifications are subject to change without prior notice. For the latest product information, please visit www.ikegawacctv.com.

© 2026 Ikegawa Co., Ltd. All rights reserved.

## Specifications

| Camera | |
|---|---|
| Image Sensor | 1/2.8” Progressive Scan CMOS |
| Max. Resolution | 5MP, 2592(H) × 1944(V) |
| Shutter Speed | 1/5 to 1/20,000s |
| Min. Illumination | Color: 0.001 Lux @ (F1.0, AGC ON), 0 Lux with illuminator on |
| Day & Night | Fixed filter |
| Angle Adjustment | Pan: 0° to 360°, Tilt: 0° to 90°, Rotation: 0° to 360° |
| **Lens** | |
| Lens Type | Fixed lens, Fixed focal |
| Focal Length | 2.8 mm, 4 mm optional |
| Max. Aperture | F1.0 |
| Field of View (FOV) | 2.8 mm:<br>- H: 96.9°, V: 69.7°<br>4 mm:<br>- H: 78.2°, V: 57.1° |
| Iris | Fixed Iris |
| **Illuminator** | |
| Illuminator Type | Warm light |
| Illumination Distance | Up to 40m (131.2 ft) |
| Illuminator Control | Auto/Manual |
| **Intelligent Analytics** | |
| AI Multi-Target Detection | - Supports face, human, and vehicle detection with snapshot capture<br>- Supports tracking display modes: Full Frame, Four-Corner Frame, and Mosaic |
| Intelligent Analysis | Intrusion, smart motion detection, single line crossing, double line crossing, loitering, wrong-way detection, area people limit, perimeter detection, illegal parking, running detection, fall detection, and fight detection.<br>- Supports accurate human and vehicle classification |
| People Counting | Supported |
| **Video & Audio** | |
| Number of Streams | 3 Streams |
| Resolution | Stream1: 2592×1944, 2592×1520, 1920×1080, 1280×720<br>Stream2: D1, VGA, CIF<br>Stream3: VGA, CIF, QVGA |
| Frame Rate | Up to 25/30fps |
| Bit Rate Control | CBR/VBR |

Product specifications are subject to change without prior notice. For the latest product information, please visit www.ikegawacctv.com.

© 2026 Ikegawa Co., Ltd. All rights reserved.

| | |
|---|---|
| Bit Rate | Stream1: 200 Kbps to 12 Mbps<br>Stream2: 100 Kbps to 6 Mbps<br>Stream3: 100 Kbps to 3 Mbps |
| Smart Encoding | Supported |
| Region of Interest (ROI) | Off/On (8 Zone, Rectangle) |
| Audio Compression | G.711 A-law, G.711 µ-law, RAW_PCM |
| Audio Bit Rate | 64 Kbps (G.711), 128 Kbps (RAW_PCM) |
| **Image** | |
| Image Adjustment | Brightness, Sharpness, Contrast, Saturation adjustable |
| Scene Mode | Indoor, Outdoor, Mirror, Corridor mode |
| Exposure Mode | Auto, Manual, Shutter priority |
| White Balance | Auto, Tungsten, Fluorescent, Daylight, Shadow, Manual |
| Day/Night Setting | Auto, Day, Night, Timer |
| Noise Reduction | 2D/3D DNR |
| Image Enhancement | HLC, BLC, Defog, WDR |
| Wide Dynamic Range | True WDR (120dB) |
| Privacy Masking | 4 areas |
| **Event** | |
| Alarm Triggers | IVS, Motion detection, Alarm input, Network alarm, Disk alarm, Day/Night switch alarm, Abnormal sound detection |
| Event Actions | Alarm record, Alarm output, FTP upload, Email notification, Snapshot, Audible alarm output |
| **Network** | |
| Protocols | IPv4/IPv6, HTTP/HTTPS, DNS, DDNS, DHCP, PPPoE, RTSP/ RTCP/RTP, TCP/UDP, NTP, ARP, UPnP, FTP, SMTP, QoS, ICMP, IGMP, SMTP, 802.1x, SNMP, Multicast |
| Application Programming Interface | ONVIF (Profile S/T/G/M), SDK, CGI |
| Max Concurrent Streams | 10 channels |
| User/Host Level | 32+ users, 3 levels: Administrator, Operator, Media user |
| Web Viewer | <IE11, Chrome, Firefox, Microsoft Edge |
| **Security** | |
| OS / Firmware Protect | Encrypted firmware, Secure boot, Signed firmware |
| User Authentication | Digest authentication, Brute-force attack protection |
| Network Authentication | IEEE 802.1X (EAP-TLS) |
| Secure Communication | HTTPS, WSS (WebSocket Secure), SRTP |
| Access Control | IP-based access control, Auto logout |
| Data Protect | Encryption credentials |
| Audit | Access, system, and event log management |
| Secure Storage | AES-256 encrypted SD card storage |

Product specifications are subject to change without prior notice. For the latest product information, please visit www.ikegawacctv.com.

© 2026 Ikegawa Co., Ltd. All rights reserved.

| | |
|---|---|
| Supply Chain Security | SBOM |
| **Interface** | |
| Network Interface | 1 × Ethernet (10/100 Base-T), RJ-45 connector |
| Built-in Microphone | Supported |
| Built-in Speaker | Supported |
| Audio Interface | 1ch Input, 1ch Output |
| Alarm Interface | 1ch Input, 1ch Output |
| SD Card Slot | Built-in microSD card slot, up to 1 TB |
| Reset Button | Supported |
| **General** | |
| Language | English, Chinese, Traditional Chinese, Polish, Italian, Portuguese, Spanish, Russian, French, Czech, Hungarian, Japanese, Korean. Default: English |
| Power Supply | 12 VDC (-10% to +25%)/PoE (802.3af) |
| Power Consumption | Typical: ≤ 2.3 W (12VDC) / approx. 2.9 W (PoE)<br>Max. (Light on + Speaker): ≤ 7.5 W (12VDC) / approx. 9.4 W (PoE) |
| Operating Temperature | -40 °C to 60 °C (-40 °F to 140 °F ) |
| Operating Humidity | ≤ 95% RH (Non-condensing) |
| Ingress Protection | IP66 |
| Certifications | CE-EMC<br>- EN 55032, EN IEC 61000-6-4, EN IEC 61000-3-2, EN 61000-3-3, EN 55035, EN 50130-4<br>FCC 47 CFR Part 15 Subpart B |
| Material | Aluminum alloy housing; PC components |
| Dimensions | 303 × 100 × 107 mm (11.9 × 3.94 × 4.21 inch) |
| Net Weight | Approx. 1.25 kg (2.76 lb) |
| **DORI Distance (EN 62676-4 standard)** | |
| Detect | 2.8 mm: 66 m (216.5 ft)<br>4 mm: 78 m (255.9 ft) |
| Observe | 2.8 mm: 26.4 m (86.6 ft)<br>4 mm: 31.2 m (102.4 ft) |
| Recognize | 2.8 mm: 13.2 m (43.3 ft)<br>4 mm: 15.6 m (51.2 ft) |
| Identify | 2.8 mm: 6.6 m (21.7 ft)<br>4 mm: 7.8 m (25.6 ft) |

Product specifications are subject to change without prior notice. For the latest product information, please visit www.ikegawacctv.com.

© 2026 Ikegawa Co., Ltd. All rights reserved.

## Dimensions (mm)

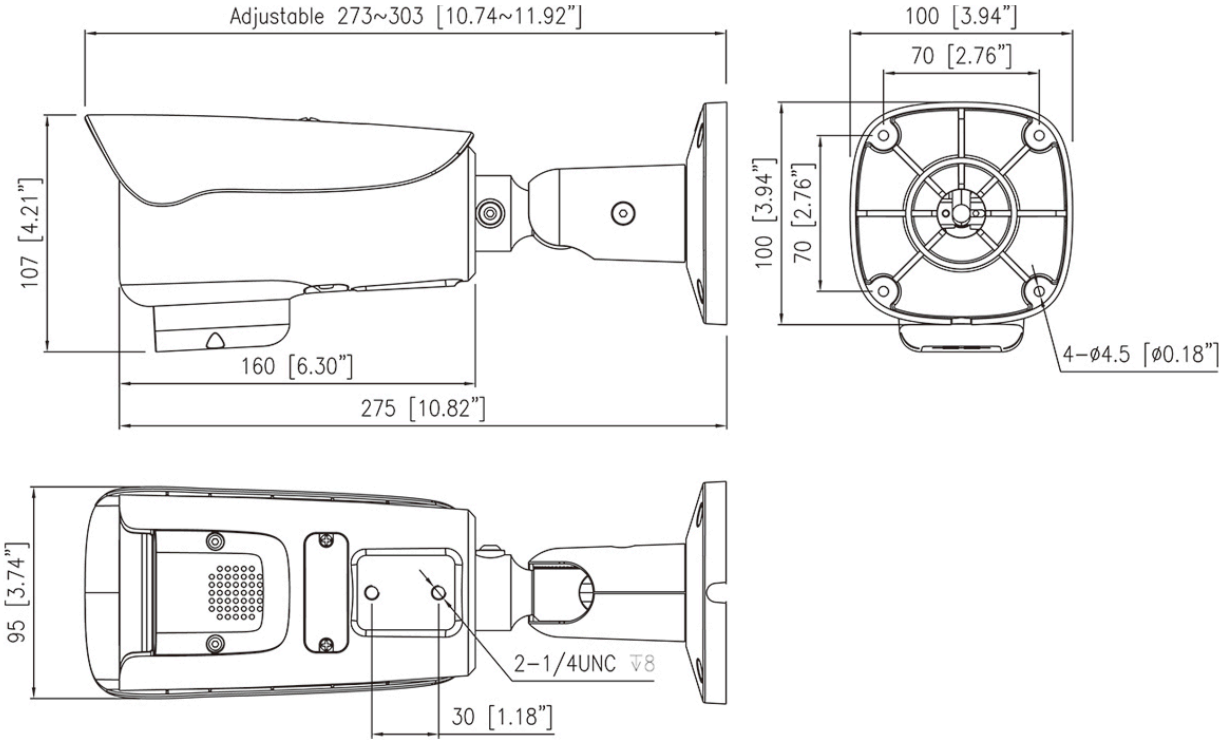


## Accessories

### Optional:

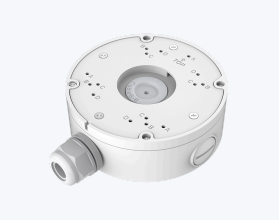

IK-AJ45G

Junction Box

IK-AP27D

Pole Mount Bracket

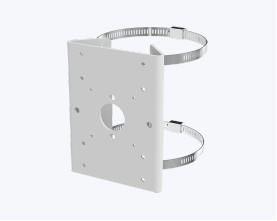

IK-AP01

Pole Mount Bracket

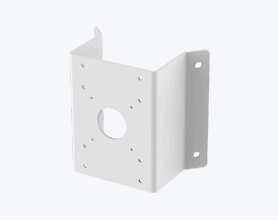

IK-ACR02

Corner Mount Bracket

Product specifications are subject to change without prior notice. For the latest product information, please visit www.ikegawacctv.com.

© 2026 Ikegawa Co., Ltd. All rights reserved.