IK-P4861FR-X40-C

7-inch 4MP 40x Starlight IR Network PTZ Camera

Key Features

- 1/1.8” STARVIS™ CMOS, up to 4MP (2688 × 1520) @ 50/60 fps
- 40x optical zoom, 16x digital zoom
- Supports face, human, and vehicle detection with snapshot capture
- Supports human and vehicle attribute analysis
- Intelligent analytics: Intrusion, smart motion detection, line crossing, loitering, wrong-way detection, area people limit, perimeter detection, illegal parking, running detection, fall detection, fight detection, smoke and flame detection, and people counting.
- Supports alarm-linked tracking and intelligent human/vehicle tracking
- True WDR (120 dB), 3D DNR, ICR, Defog and EIS
- Smart IR illumination up to 400 m
- Hardware Root of Trust with FIPS 140-3 Level 3 Certified Secure Element
- IP66, IK10-rate protection

Product specifications are subject to change without prior notice. For the latest product information, please visit www.ikegawacctv.com.

© 2026 Ikegawa Co., Ltd. All rights reserved.

Specifications

Camera	
Image Sensor	1/1.8” Progressive Scan CMOS
Max Resolution	4MP, 2688(H) × 1520(V)
Shutter Speed	1/5 to 1/20,000s
Min Illumination	Color: 0.001 Lux @ (F1.6, AGC ON), B/W: 0.0005 Lux @ (F1.6, AGC ON), 0 Lux with illuminator on
Day & Night	Auto (ICR)
S/N Ratio	55 dB
Lens	
Focal Length	6.8 to 272 mm
Max. Aperture	F1.63 to F4.94
Field of View (FOV)	H: 62.3° to 2.3°, V: 36.9° to 1.3°
Optical Zoom	40x
Digital Zoom	16x
Iris	Auto / Manual
Focus Control	Auto / Manual / Semi-automatic
Illuminator	
Type	IR
IR wavelength	850 nm
Distance	Up to 400 m (1,312.3 ft)
Control	Auto / Manual
Intelligent Analytics	
AI Multi-Target Detection	- Supports face, human, and vehicle detection with snapshot capture - Supports human and vehicle attribute analysis - Supports tracking display modes: Full Frame, Four-Corner Frame, and Mosaic
Attribute Analysis	Human Attributes: Gender, age, glasses, hat, bag, upper clothing color & style, lower clothing color & style, reflective vest. Vehicle Attributes: Type, color, brand, orientation
Intelligent Analysis	Intrusion detection, smart motion detection, single line crossing, double line crossing, loitering, wrong-way detection, area people limit, perimeter detection, illegal parking, running detection, fall detection, fight detection. - Supports alarm triggering based on specified target types (human/vehicle)
Smoke and Flame Detection	Supported
People Counting	Supported
Video & Audio	

Product specifications are subject to change without prior notice. For the latest product information, please visit www.ikegawacctv.com.

© 2026 Ikegawa Co., Ltd. All rights reserved.

Number of Streams	3 Streams
Resolution	Stream 1: 2688 × 1520, 2560 × 1440, 2304 × 1296, 1920 × 1080, 1280 × 720 Stream 2: D1, VGA, CIF Stream 3: VGA, CIF, QVGA
Frame Rate	Up to 50/60 fps
Bit Rate Control	CBR/VBR
Bit Rate	Stream 1: 200 Kbps to 16 Mbps Stream 2: 100 Kbps to 6 Mbps Stream 3: 100 Kbps to 3 Mbps
Smart Encoding	Supported
Region of Interest (ROI)	Supported
Audio Compression	G.711 A-law, G.711 μ-law, RAW_PCM
Audio Bit Rate	64 kbps (G.711), 128 kbps (RAW_PCM)
Image	
Image Adjustment	Brightness, Sharpness, Contrast, Saturation adjustable
Scene Mode	Indoor, Outdoor, Mirror
Exposure Mode	Auto, Manual, Shutter priority, Iris priority
White Balance	Auto, Tungsten, Fluorescent, Daylight, Shadow, Manual
Day/Night Setting	Auto, Day mode, Night mode, Timer
Noise Reduction	2D/3D DNR
Image Enhancement	HLC, BLC, Defog, WDR, Anti-shake
Wide Dynamic Range	True WDR (120 dB)
Privacy Masking	Up to 40 privacy zones
PTZ	
Pan/Tilt Range	Pan: 0° to 360° endless, Tilt: -10° to +90° (auto-flip)
Pan Speed	Pan speed: 0.1° to 300°/s, preset speed: 300°/s
Tilt Speed	Tilt speed: 0.1° to 300°/s, preset speed: 300°/s
Preset Accuracy	≤ 0.2°
Preset	400
Track	6 Track
Scan	12 Scan
Tour	12 Tour (up to 32 presets each tour)
Intelligent Tracking	Human/Vehicle auto tracking
Power-Off Memory	Supported
3D Positioning	Supported
PTZ Status Display	Supported
Idle Motion	The time can be set (1-240 minutes), and functions such as preset positions, patrols, scans, and tracks can be run.

Product specifications are subject to change without prior notice. For the latest product information, please visit www.ikegawacctv.com.

© 2026 Ikegawa Co., Ltd. All rights reserved.

Event	
Alarm Triggers	IVS, Motion detection, Alarm input, Network alarm, Disk alarm, Day/Night switch alarm, Abnormal sound detection
Event Actions	Alarm record, FTP upload, Email notification, Snapshot, Alarm output, Alarm-linked tracking, Audible alarm output
Network	
Protocols	IPv4/IPv6, HTTP/HTTPS, DNS, DDNS, DHCP, PPPoE, RTSP/ RTCP/RTP, TCP/UDP, NTP, ARP, UPnP, FTP, SMTP, QoS, ICMP, IGMP, SMTP, 802.1x, SNMP, Multicast
Application Programming Interface	ONVIF (Profile S/T/G/M), SDK, CGI
Max Concurrent Streams	10 channels
User/Host Level	32+ users, 3 user levels: Administrator, Operator, and Media User
Web Viewer	Chrome, Firefox, Microsoft Edge, IE11 or earlier
Security	
OS / Firmware Protect	Encrypted firmware, Secure boot, Signed firmware
User Authentication	Digest authentication, Brute-force attack protection
Network Authentication	IEEE 802.1X (EAP-TLS)
Secure Communication	HTTPS, WSS (WebSocket Secure), SRTP
Access Control	IP-based access control, Auto logout
Data Protect	Encryption credentials
Audit	Access, system, and event logs
Secure Storage	AES-256 encrypted SD card storage
Supply Chain Security	SBOM
Hardware Security	FIPS 140-3 Level 3 certified Secure Element
Interface	
Network Interface	1 × RJ45 10/100 Mbps Ethernet port
Audio Interface	1 input (RCA), 1 output (RCA)
Alarm Interface	7 inputs, 2 outputs
RS-485	1 × RS-485
CVBS Output	1 × BNC
SD Card Slot	Built-in microSD card slot (up to 1 TB)
General	
Language	English, Chinese, Traditional Chinese, Polish, Italian, Portuguese, Spanish, Russian, French, Czech, Hungarian, Japanese, Korean. Default: English
Power Supply	24 VAC / 36 VDC / PoE++ (802.3bt), Standard Equipped: 36 VDC
Power Consumption	Max. 45 W
Operating Temperature	-40 °C to 60 °C (-40 °F to 140 °F)

Product specifications are subject to change without prior notice. For the latest product information, please visit www.ikegawacctv.com.

© 2026 Ikegawa Co., Ltd. All rights reserved.

Operating Humidity	≤ 95% RH (Non-condensing)
Ingress Protection	IP66, IK10, NEMA 4X (optional)
Certifications	CE-EMC: EN 55032, EN IEC 61000-6-3, EN IEC 61000-3-2, EN 61000-3-3, EN 55035, EN 50130-4 CE-LVD: EN IEC 62368-1 FCC: 47 CFR Part 15, Subpart B
Material	Aluminum alloy housing
Dimensions	φ226.1 × 362.8 mm (φ8.9 × 14.28 inch)
Net Weight	Approx. 5.5 kg (12.13 lb)
DORI Distance (EN 62676-4 standard)	
Detect	95 to 5,600 m (311.68 to 18,372.7 ft)
Observe	38 to 1,520 m (124.67 to 4,986.88 ft)
Recognize	19 to 760 m (62.34 to 2,493.44 ft)
Identify	9.5 to 380 m (31.17 to 1,246.72 ft)

Dimensions (mm)

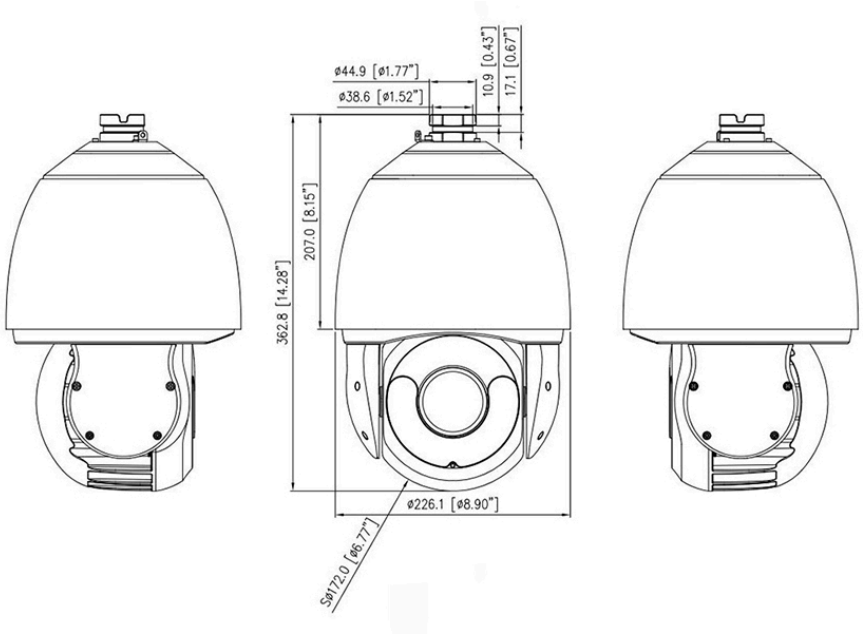

Product specifications are subject to change without prior notice. For the latest product information, please visit www.ikegawacctv.com.

© 2026 Ikegawa Co., Ltd. All rights reserved.

Accessories

Optional:

IK-AW06B

Wall Mount Bracket

IK-AC348A

Ceiling Mount Bracket

IK-AP604B

Pole Mount Bracket

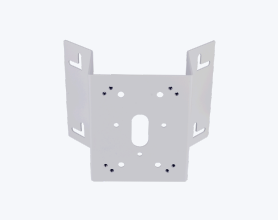

IK-ACR605

Corner Mount Bracket

IK-AJ367

Junction Box

IK-AP359

Pole Mount Bracket

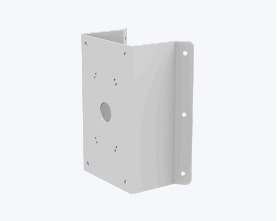

IK-ACR358

Corner Mount Bracket

Product specifications are subject to change without prior notice. For the latest product information, please visit www.ikegawacctv.com.

© 2026 Ikegawa Co., Ltd. All rights reserved.