# IK-T8802FW-B

8MP Full Color Turret Network Camera

## Key Features

- 1/2.8” STARVIS™ CMOS, up to 8MP (3840 × 2160) @ 25/30 fps
- 2.8 mm / 4 mm fixed lens optional
- Supports face, human, and vehicle detection with snapshot capture
- Supports human and vehicle attribute analysis
- Intelligent analytics: Intrusion, smart motion detection, single line crossing, double line crossing, loitering, wrong-way detection, area people limit, perimeter detection, illegal parking, running detection, fall detection, fight detection, and people counting.
- True WDR (120dB), 3D DNR, ROI, Defog, HLC
- Built-in warm lights, illumination distance up to 30m
- Built-in microphone, 1/1 audio input/output, 1/1 alarm input/output
- Built-in microSD card slot
- IP67-rated housing

Product specifications are subject to change without prior notice. For the latest product information, please visit www.ikegawacctv.com.

© 2026 Ikegawa Co., Ltd. All rights reserved.

## Specifications

| Camera | |
|---|---|
| Image Sensor | 1/2.8” Progressive Scan CMOS |
| Max. Resolution | 8MP, 3840(H) × 2160(V) |
| Shutter Speed | 1/5 to 1/20,000s |
| Min. Illumination | Color: 0.001 Lux @ (F1.0, AGC ON), 0 Lux with illuminator on |
| Day & Night | Fixed filter |
| Angle Adjustment | Pan: 0° to 355°, Tilt: 0° to 80°, Rotation: 0° to 360° |
| **Lens** | |
| Lens Type | Fixed lens, Fixed focal |
| Focal Length | 2.8 mm, 4 mm optional |
| Max. Aperture | F1.0 |
| Field of View (FOV) | 2.8 mm:<br>- H: 105.8°, V: 55.8°<br>4 mm:<br>- H: 85.4°, V: 46.4° |
| Iris | Fixed Iris |
| **Illuminator** | |
| Illuminator Type | Warm light |
| Illumination Distance | Up to 30 m (98.4 ft) |
| Illuminator Control | Auto/Manual |
| **Intelligent Analytics** | |
| AI Multi-Target Detection | - Supports face, human, and vehicle detection with snapshot capture<br>- Supports human and vehicle attribute analysis<br>- Supports tracking display modes: Full Frame, Four-Corner Frame, and Mosaic |
| Attribute Analysis | Human Attributes: Gender, age, glasses, hat, bag, upper clothing color & style, lower clothing color & style, reflective vest.<br>Vehicle Attributes: Type, color, brand, orientation. |
| Intelligent Analysis | Intrusion detection, smart motion detection, single line crossing, double line crossing, loitering, wrong-way detection, area people limit, perimeter detection, illegal parking, running detection, fall detection, and fight detection.<br>- Supports accurate human and vehicle classification |
| People Counting | Supported |
| **Video & Audio** | |
| Number of Streams | 3 Streams |
| Resolution | Stream1: 3840×2160, 2592×1944, 2592×1520, 2560×1440, 2304×1296, 1920×1080, 1280×720<br>Stream2: D1, VGA, CIF<br>Stream3: VGA, CIF, QVGA |

Product specifications are subject to change without prior notice. For the latest product information, please visit www.ikegawacctv.com.

© 2026 Ikegawa Co., Ltd. All rights reserved.

| | |
|---|---|
| Frame Rate | Up to 25/30fps |
| Bit Rate Control | CBR/VBR |
| Bit Rate | Stream1: 200 Kbps to 16 Mbps<br>Stream2: 100 Kbps to 6 Mbps<br>Stream3: 100 Kbps to 3 Mbps |
| Smart Encoding | Supported |
| Region of Interest (ROI) | Off/On (8 areas, Rectangle) |
| Audio Compression | G.711 A-law, G.711 µ-law, RAW_PCM |
| Audio Bit Rate | 64 Kbps (G.711), 128 Kbps (RAW_PCM) |
| **Image** | |
| Image Adjustment | Brightness, Sharpness, Contrast, Saturation adjustable |
| Scene Mode | Indoor, Outdoor, Mirror, Corridor mode |
| Exposure Mode | Auto, Manual, Shutter priority |
| White Balance | Auto, Tungsten, Fluorescent, Daylight, Shadow, Manual |
| Day/Night Setting | Auto, Day, Night, Timer |
| Noise Reduction | 2D/3D DNR |
| Image Enhancement | WDR, HLC, BLC, Defog |
| Wide Dynamic Range | True WDR (120dB) |
| Privacy Masking | 4 areas |
| **Event** | |
| Alarm Triggers | IVS, Motion detection, Alarm input, Network alarm, Disk alarm, Day/Night switch alarm, Abnormal sound detection |
| Event Actions | Alarm record, SMTP upload, FTP upload, Alarm output, Snapshot, Audible alarm output |
| **Network** | |
| Protocols | IPv4/IPv6, HTTP/HTTPS, DNS, DDNS, DHCP, PPPoE, RTSP/ RTCP/RTP, TCP/UDP, NTP, ARP, UPnP, FTP, SMTP, QoS, ICMP, IGMP, SMTP, 802.1x, SNMP, Multicast |
| Application Programming Interface | ONVIF (Profile S/T/G/M), SDK, CGI |
| Max Concurrent Streams | 10 channels |
| User/Host Level | 32+ users, 3 levels: Administrator, Operator, Media user |
| Web Viewer | <IE11, Chrome, Firefox, Microsoft Edge |
| **Security** | |
| OS / Firmware Protect | Encrypted firmware, Signed firmware |
| User Authentication | Digest authentication, Brute-force attack protection |
| Network Authentication | IEEE 802.1X (EAP-TLS) |
| Secure Communication | HTTPS, WSS (WebSocket Secure), SRTP |
| Access Control | IP-based access control, Auto logout |
| Data Protect | Encryption credentials |

Product specifications are subject to change without prior notice. For the latest product information, please visit www.ikegawacctv.com.

© 2026 Ikegawa Co., Ltd. All rights reserved.

| | |
|---|---|
| Audit | Access, system, and event log management |
| Secure Storage | AES-256 encrypted SD card storage |
| Supply Chain Security | SBOM |
| **Interface** | |
| Network Interface | 1 × Ethernet (10/100 Base-T), RJ-45 connector |
| Built-in Microphone | Supported |
| Audio Interface | 1ch Input, 1ch Output |
| Alarm Interface | 1ch Input, 1ch Output |
| SD Card Slot | Built-in, up to 256GB |
| Reset Button | Supported |
| **General** | |
| Language | English, Chinese, Traditional Chinese, Polish, Italian, Portuguese, Spanish, Russian, French, Czech, Hungarian, Japanese, Korean. Default: English |
| Power Supply | 12 VDC (-15% to +25%)/PoE (802.3af) |
| Power Consumption | Max 7 W |
| Operating Temperature | -40 °C to 55 °C (-40 °F to 131 °F ) |
| Operating Humidity | ≤ 95% RH (Non-condensing) |
| Ingress Protection | IP67 (housing) |
| Certifications | CE-EMC<br>- EN 55032, EN IEC 61000-6-3, EN IEC 61000-3-2, EN 61000-3-3, EN 55035, EN 50130-4<br>FCC 47 CFR Part 15 Subpart B |
| Material | Aluminum alloy housing; PC components |
| Dimensions | φ118.2 × 93.9 mm (4.65 × 3.7 inch) |
| Net Weight | Approx. 0.55 kg (1.21 lb) |
| **DORI Distance (EN 62676-4 standard)** | |
| Detect | 2.8 mm: 90.8 m (297.9 ft)<br>4 mm: 100.9 m (331.04 ft) |
| Observe | 2.8 mm: 36.3 m (119.09 ft)<br>4 mm: 40.4 m (132.55 ft) |
| Recognize | 2.8 mm: 18.2 m (59.71 ft)<br>4 mm: 20.2 m (66.27 ft) |
| Identify | 2.8 mm: 9.1 m (29.85 ft)<br>4 mm: 10.1 m (33.14 ft) |

Product specifications are subject to change without prior notice. For the latest product information, please visit www.ikegawacctv.com.

© 2026 Ikegawa Co., Ltd. All rights reserved.

## Dimensions (mm)

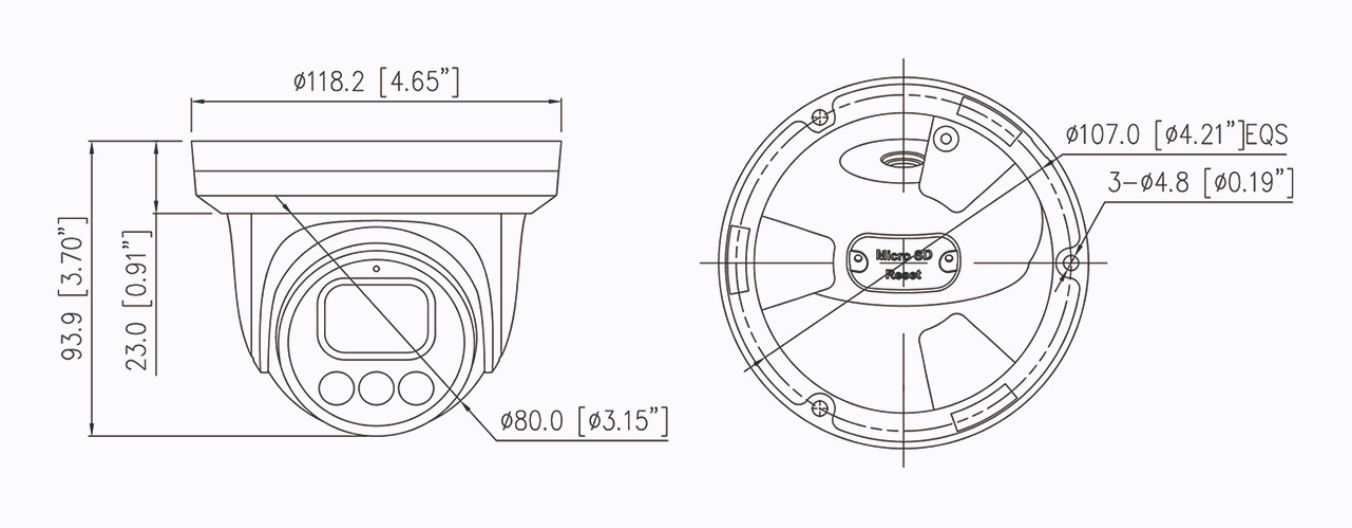


## Accessories

### Optional:

IK-AJ46M
Junction Box

IK-AW382A
Wall Mount Bracket

IK-ACC03
Pendant Cap

IK-AC02
Ceiling Mount Bracket

IK-AW01
Wall Mount Bracket

IK-AW02
Wall Mount Bracket

IK-AP01
Pole Mount Bracket

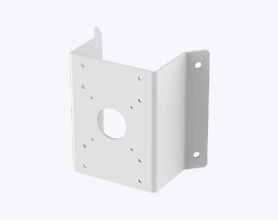

IK-ACR02
Corner Mount Bracket

Product specifications are subject to change without prior notice. For the latest product information, please visit www.ikegawacctv.com.

© 2026 Ikegawa Co., Ltd. All rights reserved.