IK-T8804FW-B

8MP Full Color Turret Network Camera

Key Features

- 1/2.8” STARVIS™ CMOS, up to 8MP (3840 × 2160) @ 25/30 fps
- Supports face, human, and vehicle detection with snapshot capture
- Supports human and vehicle attribute analysis
- Intelligent analytics: Intrusion, smart motion detection, single line crossing, double line crossing, loitering, wrong-way detection, area people limit, perimeter detection, illegal parking, running detection, fall detection, fight detection, and people counting.
- True WDR (120dB), 3D DNR, ROI, Defog, HLC
- Built-in warm lights, illumination distance up to 30m
- Built-in mic and speaker, 1/1 audio input/output, 1/1 alarm input/output
- Built-in microSD card slot
- IP66 protection

Product specifications are subject to change without prior notice. For the latest product information, please visit www.ikegawacctv.com.

© 2026 Ikegawa Co., Ltd. All rights reserved.

Specifications

Camera	
Image Sensor	1/2.8” Progressive Scan CMOS
Max. Resolution	8MP, 3840(H) × 2160(V)
Shutter Speed	1/5 to 1/20,000s
Min. Illumination	Color: 0.001 Lux @ (F1.0, AGC ON), 0 Lux with illuminator on
Day & Night	Fixed filter
Angle Adjustment	Pan: 0° to 360°, Tilt: 0° to 80°, Rotation: 0° to 360°
Lens	
Lens Type	Fixed lens, Fixed focal
Focal Length	2.8 mm, 4 mm optional
Max. Aperture	F1.0
Field of View (FOV)	2.8 mm: - H: 105.8°, V: 55.8° 4 mm: - H: 85.4°, V: 46.4°
Iris	Fixed Iris
Illuminator	
Illuminator Type	Warm light
Illumination Distance	Up to 30 m (98.4 ft)
Illuminator Control	Auto/Manual
Intelligent Analytics	
AI Multi-Target Detection	- Supports face, human, and vehicle detection with snapshot capture - Supports human and vehicle attribute analysis - Supports tracking display modes: Full Frame, Four-Corner Frame, and Mosaic
Attribute Analysis	Human Attributes: Gender, age, glasses, hat, bag, upper clothing color & style, lower clothing color & style, reflective vest. Vehicle Attributes: Type, color, brand, orientation.
Intelligent Analysis	Intrusion detection, smart motion detection, single line crossing, double line crossing, loitering, wrong-way detection, area people limit, perimeter detection, illegal parking, running detection, fall detection, and fight detection. - Supports accurate human and vehicle classification
People Counting	Supported
Video & Audio	
Number of Streams	3 Streams
Resolution	Stream1: 3840×2160, 2592×1944, 2592×1520, 2560×1440, 2304×1296, 1920×1080, 1280×720 Stream2: D1, VGA, CIF Stream3: VGA, CIF, QVGA

Product specifications are subject to change without prior notice. For the latest product information, please visit www.ikegawacctv.com.

© 2026 Ikegawa Co., Ltd. All rights reserved.

Frame Rate	Up to 25/30fps
Bit Rate Control	CBR/VBR
Bit Rate	Stream1: 200 Kbps to 16 Mbps Stream2: 100 Kbps to 6 Mbps Stream3: 100 Kbps to 3 Mbps
Smart Encoding	Supported
Region of Interest (ROI)	Off/On (8 areas, Rectangle)
Audio Compression	G.711 A-law, G.711 µ-law, RAW_PCM
Audio Bit Rate	64 Kbps (G.711), 128 Kbps (RAW_PCM)
Image	
Image Adjustment	Brightness, Sharpness, Contrast, Saturation adjustable
Scene Mode	Indoor, Outdoor, Mirror, Corridor mode
Exposure Mode	Auto, Manual, Shutter priority
White Balance	Auto, Tungsten, Fluorescent, Daylight, Shadow, Manual
Day/Night Setting	Auto, Day, Night, Timer
Noise Reduction	2D/3D DNR
Image Enhancement	WDR, HLC, BLC, Defog
Wide Dynamic Range	True WDR (120dB)
Privacy Masking	4 areas
Event	
Alarm Triggers	IVS, Motion detection, Alarm input, Network alarm, Disk alarm, Day/Night switch alarm, Abnormal sound detection
Event Actions	Alarm record, SMTP upload, FTP upload, Alarm output, Snapshot, Audible alarm output
Network	
Protocols	IPv4/IPv6, HTTP/HTTPS, DNS, DDNS, DHCP, PPPoE, RTSP/ RTCP/RTP, TCP/UDP, NTP, ARP, UPnP, FTP, SMTP, QoS, ICMP, IGMP, SMTP, 802.1x, SNMP, Multicast
Application Programming Interface	ONVIF (Profile S/T/G/M), SDK, CGI
Max Concurrent Streams	10 channels
User/Host Level	32+ users, 3 levels: Administrator, Operator, Media user
Web Viewer	<IE11, Chrome, Firefox, Microsoft Edge
Security	
OS / Firmware Protect	Encrypted firmware, Signed firmware
User Authentication	Digest authentication, Brute-force attack protection
Network Authentication	IEEE 802.1X (EAP-TLS)
Secure Communication	HTTPS, WSS (WebSocket Secure), SRTP
Access Control	IP-based access control, Auto logout
Data Protect	Encryption credentials

Product specifications are subject to change without prior notice. For the latest product information, please visit www.ikegawacctv.com.

© 2026 Ikegawa Co., Ltd. All rights reserved.

Audit	Access, system, and event log management
Secure Storage	AES-256 encrypted SD card storage
Supply Chain Security	SBOM
Interface	
Network Interface	1 × Ethernet (10/100 Base-T), RJ-45 connector
Built-in Microphone	Supported
Built-in Speaker	Supported
Audio Interface	1ch Input, 1ch Output
Alarm Interface	1ch Input, 1ch Output
SD Card Slot	Built-in, up to 256GB
Reset Button	Supported
General	
Language	English, Chinese, Traditional Chinese, Polish, Italian, Portuguese, Spanish, Russian, French, Czech, Hungarian, Japanese, Korean. Default: English
Power Supply	12 VDC (-15% to +25%)/PoE (802.3af)
Power Consumption	Max 10 W
Operating Temperature	-40 °C to 55 °C (-40 °F to 131 °F)
Operating Humidity	≤ 95% RH (Non-condensing)
Ingress Protection	IP66
Certifications	CE-EMC - EN 55032, EN IEC 61000-6-3, EN IEC 61000-3-2, EN 61000-3-3, EN 55035, EN 50130-4 FCC 47 CFR Part 15 Subpart B
Material	Aluminum alloy housing; PC components
Dimensions	φ140 × 119.2 mm (5.51 × 4.69 inch)
Net Weight	Approx. 0.9 kg (1.98 lb)
DORI Distance (EN 62676-4 standard)	
Detect	2.8 mm: 90.8 m (297.9 ft) 4 mm: 100.9 m (331.04 ft)
Observe	2.8 mm: 36.3 m (119.09 ft) 4 mm: 40.4 m (132.55 ft)
Recognize	2.8 mm: 18.2 m (59.71 ft) 4 mm: 20.2 m (66.27 ft)
Identify	2.8 mm: 9.1 m (29.85 ft) 4 mm: 10.1 m (33.14 ft)

Product specifications are subject to change without prior notice. For the latest product information, please visit www.ikegawacctv.com.

© 2026 Ikegawa Co., Ltd. All rights reserved.

Dimensions (mm)

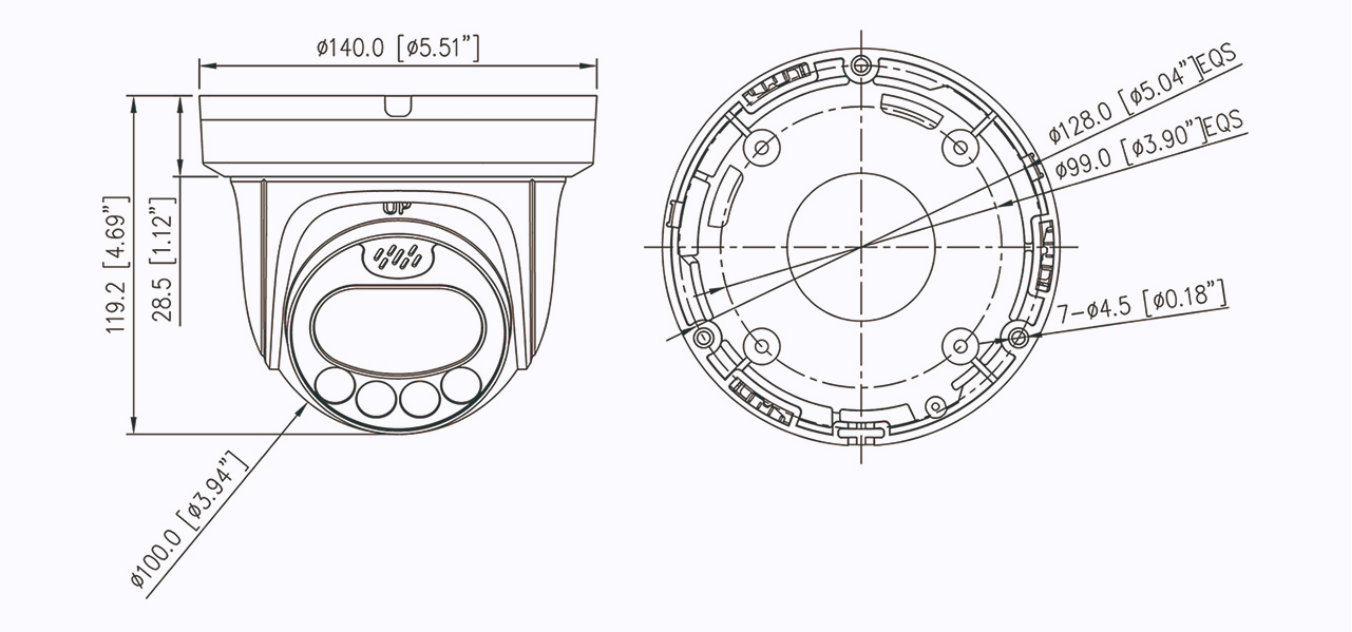

Accessories

Optional:

IK-AJ45G

Junction Box

IK-ACC06

Pendant Cap

IK-AC02

Ceiling Mount Bracket

IK-AW01

Wall Mount Bracket

IK-AW02

Wall Mount Bracket

IK-AP01

Pole Mount Bracket

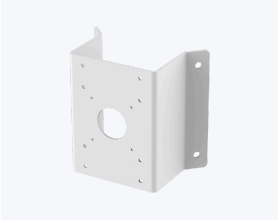

IK-ACR02

Corner Mount Bracket

Product specifications are subject to change without prior notice. For the latest product information, please visit www.ikegawacctv.com.

© 2026 Ikegawa Co., Ltd. All rights reserved.