KEGAWA



# IK-D4503NR-B

## 4MP IR Fixed Dome Network Camera

### Key Features

- 1/3” progressive scan CMOS
- Max. 4MP(2560×1440) @25/30fps resolution
- 2.8mm fixed lens (4mm optional)
- DWDR, 3D DNR, ROI, HLC, BLC, Defog
- Support human and vehicle detection
- Intelligent analysis: intrusion, single / double line crossing, loitering, wrong-way detection, illegal parking, smart motion detection, and people counting
- Smart IR distance up to 30m
- Built-in mic, and SD card slot
- IP66, IK10 protection

# Specification

| | | | | |
|---|---|---|---|---|
| **Camera** | | | | |
| Image Sensor | 1/3” Progressive Scan CMOS | | | |
| Max. Resolution | 4MP, 2560(H) × 1440(V) | | | |
| Electronic Shutter | Auto/Manual, 1/5 to 1/20,000s | | | |
| Min. illumination | Color: 0.01 Lux @ (F1.6, AGC ON), B/W: 0 Lux with IR | | | |
| Day & Night | IR cut filter | | | |
| Wide Dynamic Range | DWDR | | | |
| Angle Adjustment | Pan: 0˚ to 335˚, Tilt: 0˚ to 75˚, Rotation: 0˚ to 350˚ | | | |
| **Lens** | | | | |
| Lens Type | Fixed lens, fixed focal | | | |
| Iris | Fixed Iris | | | |
| Focal Length | 2.8 mm (4 mm optional) | | | |
| Max. Aperture | F2.0 | | | |
| Field of View (FOV) | 2.8 mm,<br>- H: 96.4°, V: 53.8° | | | |
| **DORI Distance** | | | | |
| Lens | Detect | Observe | Recognize | Identify |
| 2.8 mm | 66 m (216.5 ft) | 26.4 m (86.6 ft) | 13.2 m (43.3 ft) | 6.6 m (21.7 ft) |
| DORI (Detect, Observe, Recognize, and Identify) is a standard system (EN-62676-4) for defining the ability of a person viewing the video to distinguish persons or objects within a covered area. The numbers in this table do not reflect intelligent function distances. | | | | |
| **Illuminator** | | | | |
| Illuminator Type | IR | | | |
| Illumination Distance | Up to 30 m (98.4 ft) | | | |
| Illumination Control | Auto/Manual | | | |
| IR wavelength | 850 nm | | | |
| **Intelligent Analytics** | | | | |
| Multi-Object Detection | Supports human/vehicle detection.<br>Supports multiple frame modes: Full Frame, Four-corner Frame, and Mosaic. | | | |
| Intelligent Analysis | Intrusion, Single line crossing, Double line crossing, Loitering, Wrong-way, Illegal parking, and Smart motion detection.<br>Support alarm triggering by specified target types (human and vehicle) | | | |
| People Counting | Support | | | |

| | |
|---|---|
| **Video and Audio** | |
| Streaming Capability | 3 Streams |
| Stream/Frame Rate | Stream1: 2560×1440, 2304×1296, 1920×1080, 1280×720 @25/30fps<br>Stream2: D1, VGA, CIF @25/30fps<br>Stream3: VGA, CIF, QVGA @25/30fps |
| Bit Rate Control | CBR/VBR |
| Bit Rate | Stream1: 200 Kbps to 12 Mbps<br>Stream2: 100 Kbps to 6 Mbps<br>Stream3: 100 Kbps to 3 Mbps |
| Region of Interest | Off/On (8 areas, Rectangle) |
| Smart Encode | Support |
| Audio Compression | G.711 A-law, G.711 μ-law, RAM PCM |
| Audio Bit Rate | 64 Kbps (G.711), 128 Kbps (RAW_PCM) |
| **Image** | |
| Image Adjustment | Brightness, Sharpness, Contrast, Saturation adjustable |
| Scene Mode | Indoor, Outdoor, Mirror, Corridor mode |
| Exposure Mode | Auto, Manual, Shutter priority |
| White Balance | Auto, Tungsten, Fluorescent, Daylight, Shadow, Manual |
| Day/Night Setting | Auto, Day, Night, Timer |
| Noise Reduction | 2D/3D DNR |
| Image Enhancement | HLC, BLC, Defog, WDR |
| Privacy Masking | 4 areas |
| **Event** | |
| Alarm Triggers | IVS, Motion detection, Network alarm, Disk alarm, Day/Night switch alarm, Abnormal sound detection |
| Event Actions | Alarm record, FTP upload, SMTP upload |
| **Network** | |
| Protocols | IPv4/IPv6, RTSP/ RTCP/RTP, TCP/UDP, HTTP/HTTPS, DHCP, DNS, DDNS, PPPoE, UPnP, ICMP, IGMP, FTP, NTP, SMTP, 802.1x, SNMP |
| Interoperability | ONVIF (Profile S/T/G/M), SDK, CGI |
| Max Concurrent Streams | 4 channels |
| User/Host Level | 32 users, 3 levels: Administrator, Operator, Media user |
| Security | IP address filter, HTTPS, Illegal login lock, IEEE 802.1x |
| Web Viewer | <IE11, Chrome, Firefox, Microsoft Edge |

| Interface | |
|---|---|
| Network Interface | 1 Ethernet (10/100 Base-T) RJ-45 Connector |
| Built-in Microphone | Support |
| SD Card Slot | Built-in, up to 1 TB |
| Reset Button | Support |
| **General** | |
| Language | English, Chinese, Traditional Chinese, Polish, Italian, Portuguese, Spanish, Russian, French, Czech, Hungarian, Japanese, Korean. Default: English |
| Power Supply | 12 VDC (-15% to +25%)/PoE (802.3af) |
| Power Consumption | Typical: 1.5 W (12 VDC) / approx. 1.9 W (PoE)<br>Max (IR on): 3.5 W (12 VDC) / approx. 4.4 W (PoE) |
| Operating Temperature | -25°C to 55°C (-13°F to 131°F ) |
| Operating Humidity | Less than 90% RH |
| Ingress Protection | IP66, IK10 |
| Certifications | CE-EMC<br>- EN 55032, EN IEC 61000-6-4, EN IEC 61000-3-2, EN 61000-3-3, EN 55035, EN 50130-4<br>FCC 47 CFR Part 15 Subpart B |
| Material | Aluminum alloy body, bubble: plastic |
| Dimensions | ϕ110 × 85.4 mm (ϕ4.33 × 3.36 inch) |
| Net Weight | 0.47 kg (1.04 lb) |

## Dimensions (mm)

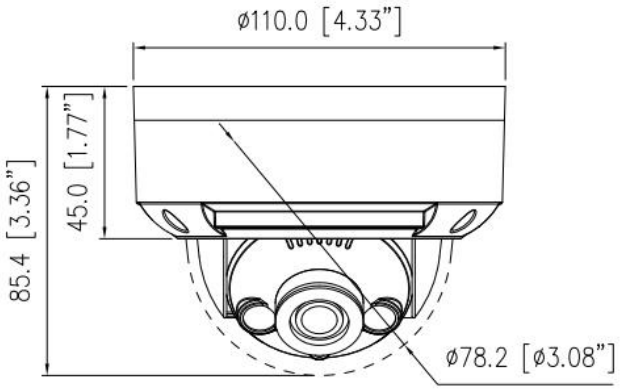


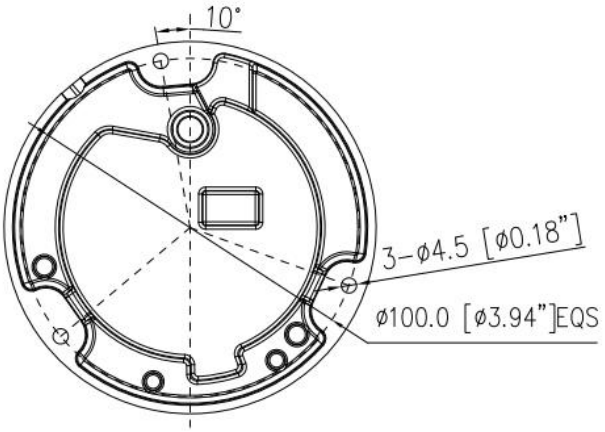


## Accessories

**Optional:**

| IK-AJ56<br>Junction Box | IK-ACC02<br>Pendant Cap | IK-AC02<br>Ceiling Bracket | IK-AW01<br>Corner Mount |
|---|---|---|---|
|  |  |  |  |
| **IK-AW02<br>Wall Mount** | **IK-AP01<br>Pole Mount** | **IK-ACR02<br>Corner Mount** | |
|  |  | 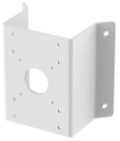 | |

©2025 IKEGAWA all rights reserved. Design and specifications are subject to change without notice. | www.ikegawa.ai